Audio Panel Interface

Hardware Design Intern: Namrata Dolas

Project Title

Audio Panel Interface – DI/DO Signal Conditioning, Isolation & Panel Switching

Date: 12 Jan 2025

Senior/Reporting manager: Balaji Mayavan

1. Objective of Month 2

The primary objective of Month 2 was to design, understand, and validate an Audio Panel Interface circuit involving:

- Digital Input (DI) signal conditioning
- Digital Output (DO) signal driving
- Electrical isolation
- Protection against reverse voltage, noise, and faults
- Clean interface between controller logic and external audio panel switches/connectors

This month involved multiple iterations:

1. Initial task understanding
2. First schematic attempt
3. Re-task based on manager feedback
4. Updated and finalized schematic

2. Initial Task (First Task)

Task Given

- Study the existing Audio Panel Interface requirement
- Design DI/DO interface circuitry
- Ensure safe interaction between controller and external panel
- Use opto-isolation and discrete components

Understanding at Start

- DI signals come from external panel switches
- DO signals go from controller to panel indicators/loads
- External panel may have:
    - Noise
    - Incorrect wiring
    - Voltage transients

Hence, **direct connection was not allowed.**

3. First Design Attempt

Approach Taken

- DI lines routed through:
  - Series resistors
  - Pull-ups
- DO lines driven using:
  - Transistor stages
- Grouped signals using connectors

Issues Identified

- No proper galvanic isolation
- DO side protection not fully defined
- Ground reference ambiguity between DI and DO
- Risk of back-feeding voltage

4. Re-Task (Feedback & Redirection)

Manager Feedback (Re-Task)

- Add proper isolation
- Separate DI logic domain and DO power domain
- Use opto-couplers
- Improve protection on DO side
- Make the design scalable and repeatable

This re-task changed the design direction completely.

5. Updated Task & Final Architecture

Final System Architecture

External Panel → DI → Opto-Isolation → Controller Logic

Controller Logic → Opto-Isolation → Transistor Driver → DO → Panel

6. Detailed Circuit Design (Final)

6.1 Digital Input (DI) Section

Components Used

- Push buttons / panel signals
- Pull-up resistors (10k)
- FSMJ63BW04 switch blocks

Design Logic

- DI line is normally pulled HIGH
- Switch pulls signal to GND
- Clean logic level presented to opto LED
- Prevents floating inputs

Learning

- Importance of pull-ups for stable DI
- Switch debounce handled logically, not in hardware

6.2 Opto-Isolation Stage

Component

- PC817 Optocoupler

Why Used

- Electrical isolation between:
  - External panel
  - Controller logic
- Protection against:
  - Ground loops

    - Voltage mismatch

DI Side

- Series resistor (330Ω) limits LED current
- Ensures safe opto operation

Learning

- Isolation is mandatory for field-connected panels
- PC817 CTR limitations understood

6.3 Digital Output (DO) Driver Stage

Components

- BC547 NPN transistor
- Base resistor (1k)
- Pull-up resistor (4.7k)
- Flyback diode (1N4007)

Working

- Opto transistor drives BC547 base
- BC547 acts as low-side switch
- DO line pulled LOW when active
- Pull-up ensures default HIGH state

Protection

- Diode protects against inductive kickback
- Prevents transistor damage

Learning

- DO should always be current-driven, not logic-driven
- Low-side switching simplifies grounding

6.4 DI–DO Separation

Achieved By

- Separate grounds
- Opto isolation
- No direct electrical connection

Result

- Noise immunity
- Fault tolerance
- Professional-grade interface

7. Connector & Signal Organization

Connectors

- Grouped DI signals
- Grouped DO signals
- Clear net naming:
  - DI_Sx
  - DO_Sx

Benefits

- Easy PCB routing
- Simplified debugging
- Scalable design (add channels easily)

8. Schematic Organization

- Audio panel interface grouped in dashed boundary
- Repeated blocks for consistency
- Clear annotation and net labels
- Power rails clearly marked (+5V, GND)

9. Challenges Faced

Technical Challenges

- Understanding DI vs DO grounding
- Correct opto LED polarity
- Deciding transistor placement (high-side vs low-side)
- Avoiding signal inversion confusion

Design Challenges

- Managing large number of repeated channels
- Keeping schematic readable
- Avoiding wiring clutter

10. How Challenges Were Solved

- Multiple schematic revisions
- Signal-flow analysis (DI → Opto → DO)
- Reviewing one channel thoroughly, then replicating
- Validation using logical states (ON/OFF cases)

11. Tools & Resources Used

- KiCad (Schematic Design)
- PC817 datasheet
- BC547 transistor datasheet
- Internal design references
    1. AERX-DO-30-CARD
    2. Dhana Wirring
- Self-exploration & trial-and-error

12. Key Learnings (Month 2)

- Real-world DI/DO design principles
- Importance of isolation in industrial panels
- Proper transistor driver design
- Protection techniques using diodes
- Designing scalable, repeatable hardware blocks
- Professional schematic structuring

13. Final Outcome

- Fully functional Audio Panel Interface schematic
- Clean DI–DO separation
- Robust, safe, and scalable design
- Ready for PCB layout stage
- Clear understanding of why each component exists

14. Self-Assessment

This month significantly improved my:

- Hardware design thinking
- Signal-flow understanding
- Ability to convert requirements into circuits
- Confidence in professional schematic design

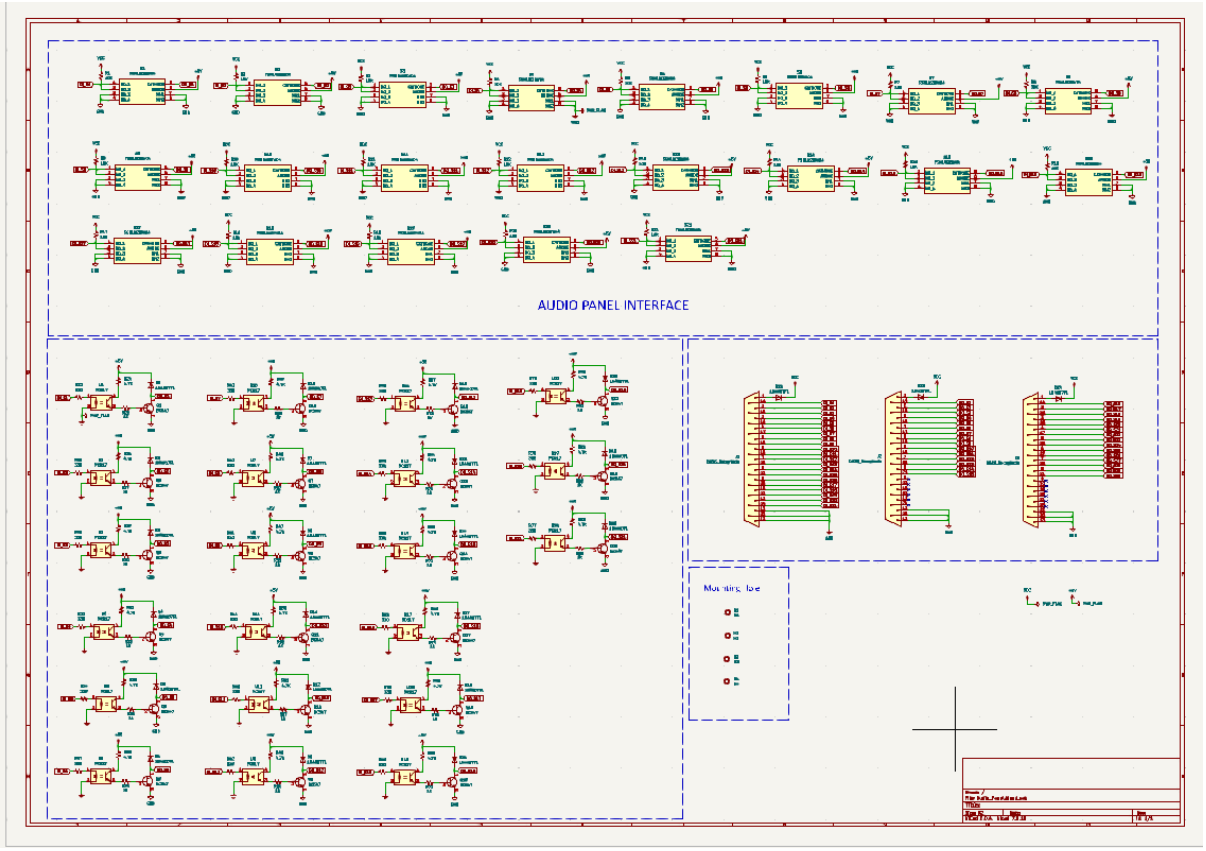

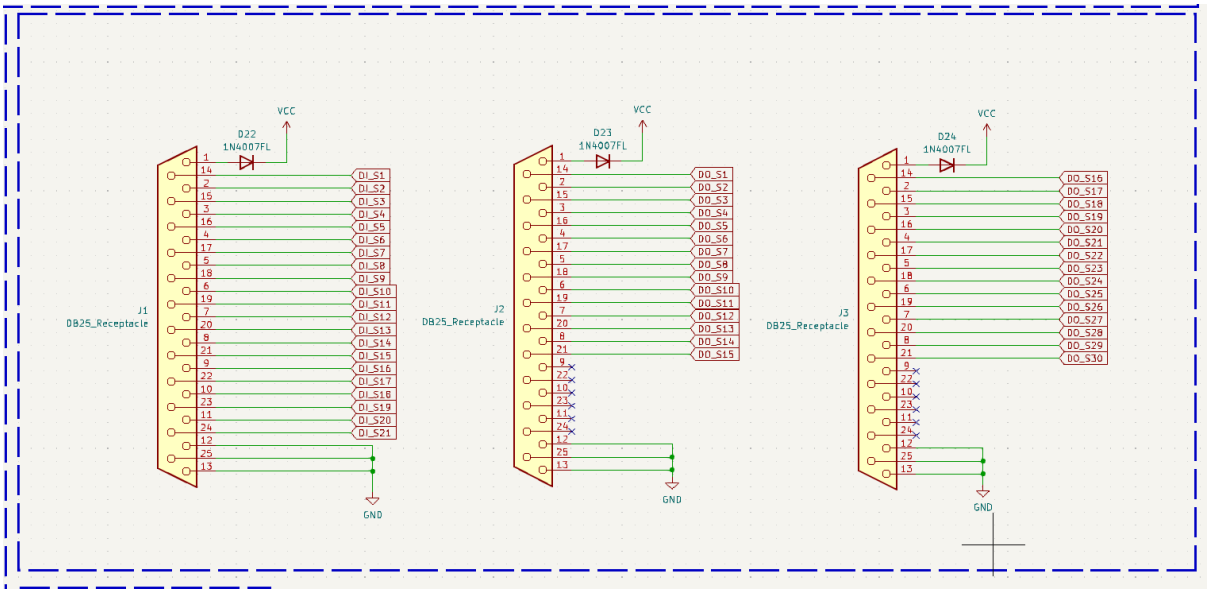
VCC
D22
1N4007FL
J1
DB25_Receptacle
DI_S1
DI_S2
DI_S3
DI_S4
DI_S5
DI_S6
DI_S7
DI_S8
DI_S9
DI_S10
DI_S11
DI_S12
DI_S13
DI_S14
DI_S15
DI_S16
DI_S17
DI_S18
DI_S19
DI_S20
DI_S21
GND
D23
1N4007FL
J2
DB25_Receptacle
DO_S1
DO_S2
DO_S3
DO_S4
DO_S5
DO_S6
DO_S7
DO_S8
DO_S9
DO_S10
DO_S11
DO_S12
DO_S13
DO_S14
DO_S15
D24
1N4007FL
J3
DB25_Receptacle
DO_S16
DO_S17
DO_S18
DO_S19
DO_S20
DO_S21
DO_S22
DO_S23
DO_S24
DO_S25
DO_S26
DO_S27
DO_S28
DO_S29
DO_S30

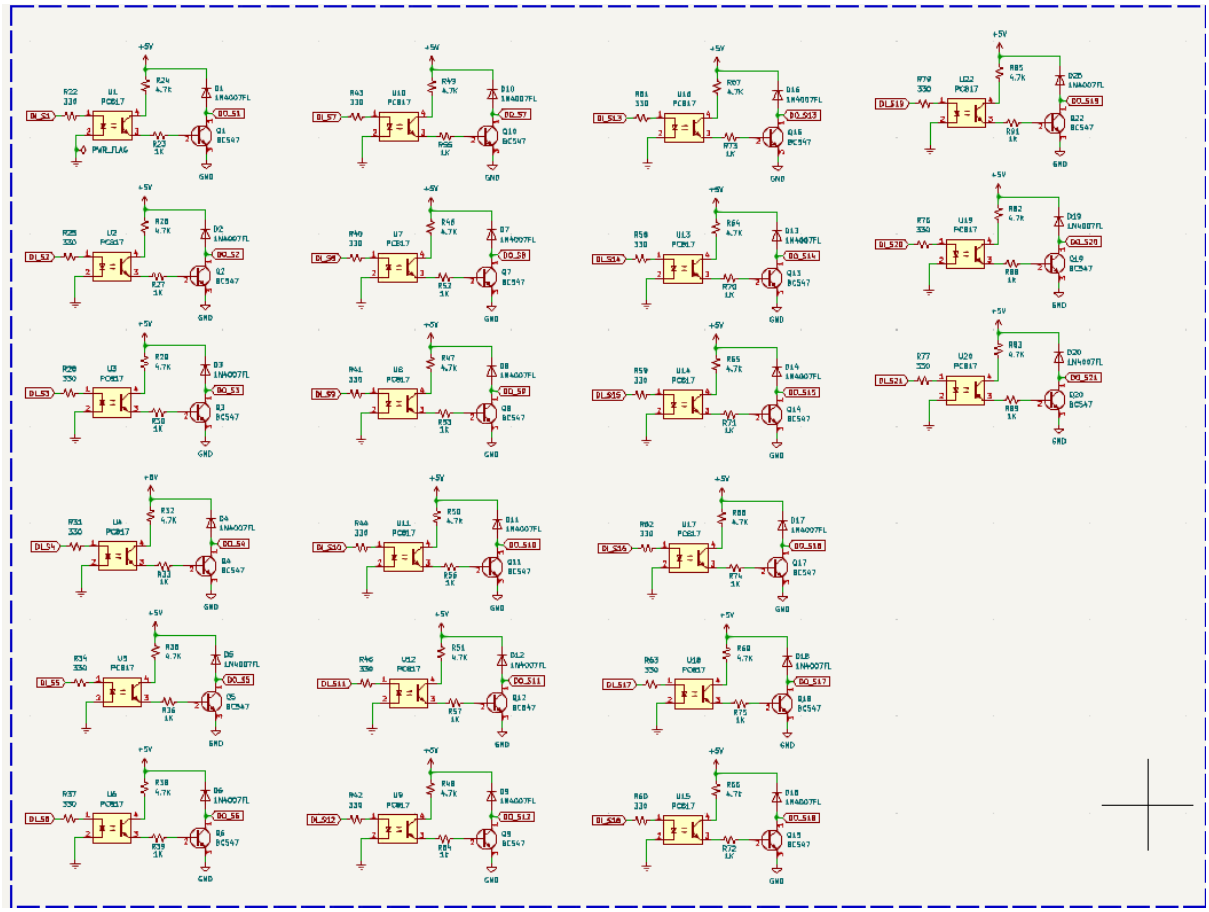
+5V
GND
PWR_FLAG

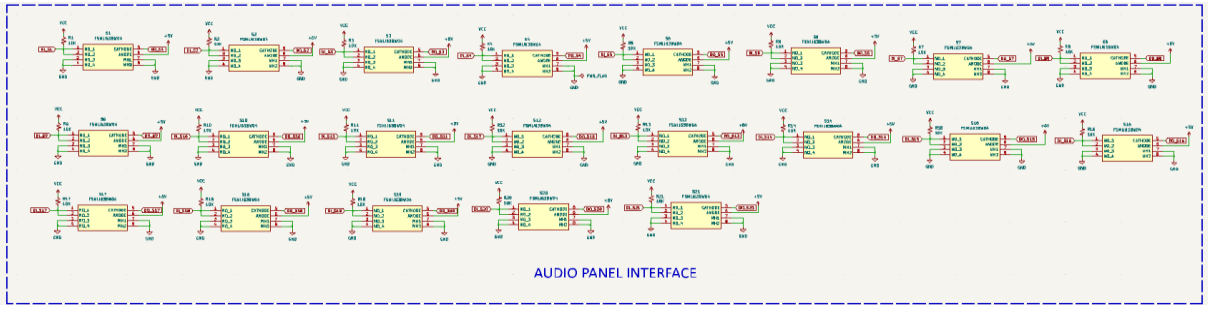
AUDIO PANEL INTERFACE